Fluorescent Indoor Luminaires
Wall Mount – Over Bed
120VAC / 60Hz

Model #: WADB232WH

Safety Precautions

- Read all safety precautions and installation instructions carefully before installing or servicing this fixture. Failure to comply with these instructions could result in potentially fatal electric shock and/or property damage.
- It is recommended that a qualified electrician perform all the wiring. This fixture must be wired in accordance with all national and local electrical codes.
- Do not handle any energized fixture or attempt to energize any fixture with wet hands or while standing on a wet or damp surface or in water.
- This fixture is designed for use in a 120VAC / 60Hz circuit. This fixture is not compatible with dimming circuits.
- Make sure that the power source conforms to the requirements of the fixture. (See labels on the fixture housing).
- To reduce the risk of electrical shock, and to assure proper operation, this fixture must be adequately grounded. To accomplish proper grounding, there must be a separate ground wire (green) contact between this fixture and the ground connection of your main power supply panel.
- This fixture is intended to be used for general indoor lighting in dry or damp locations.

Assembly Instructions

Step 1 – Preparing for installation

A. **Disconnect electrical power** at the fuse or circuit breaker box before installing or servicing any part of this fixture.
B. Carefully remove the fixture and hardware kit from the carton.
C. Remove components from the hardware kit.
D. Remove the channel (1) from the fixture by removing four side finials (9), two end caps (8), metal cover (7), diffuser (6), four screws (5) and cover (4).
E. Identify and remove the appropriate knockout (K/O) from the rear of the fixture for where the supply power source will enter. Position the channel (1) on the wall with the selected K/O aligned to the center of a 3-0 or 4-0 junction box (not included). Using the mounting slots on the channel (1) as a template, mark four mounting hole locations for support. Remove the channel (1) and create pilot holes at the marked locations using a nail or awl to verify the presence of wall studs. Where a wall stud is present, secure the bracket with four wood screws (2). Where no stud is available, drill an appropriately sized hole for four wall anchors (3), then reinstall and secure the channel (1) using the specified hardware.

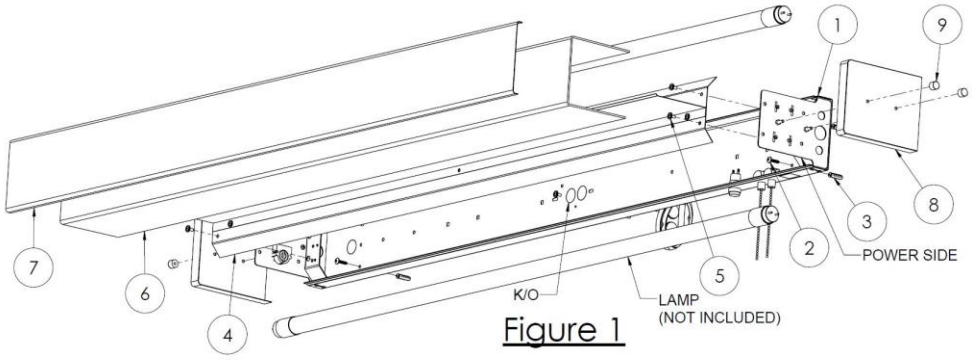

Figure 1

Wiring – All wiring must take place inside junction box (not included)

Caution: Make sure power is off at the fuse or circuit breaker box. Check power wires for damage or scrapes. If power supply wires are within three inches of the fixture, use wire suitable for at least 90°C (194°F).
Note: Most dwellings built before 1985 have supply wire rated to 60°C. Consult a qualified electrician to ensure correct branch circuit conductor before installing.

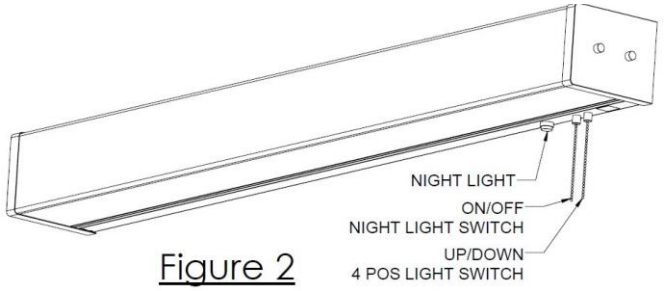

Figure 2

View shown for reference only. Individual models may vary.

Step 2 – Wiring fixture

A. Make all wire connections to appropriate wire. Secure with wire nuts (provided).
B. Connect the green wire from the fixture to the supply power source ground wire.
C. Connect the white wire from the fixture to the white (N) wire from the supply power source.
D. Connect the black wire from the fixture to the black (L) wire from the supply power source.
E. **Do not mix wires.** Pull on each wire lead to make sure connections are secure. Make certain no bare wires are exposed outside of wire connectors. Tuck all connections neatly into the junction box.

Step 3 – Install cover

A. Install the cover (4) to the channel (1) using four screws (5) to secure it.

Step 4 – Lamping (not included)

A. Install LED Tube Type B T8 G13 Bi-pin lamps (60W max) by aligning the pins of the LED tube with the slots in the lampholders. Insert the pins into the lampholders and rotate the tube ¼ turn until it locks securely in place. Ensure the tube is seated evenly and that electrical contacts are fully engaged. Repeat until second lamp is installed. Note: Fixture is single ended power on one side only.

Step 5 – Install diffuser

A. Install the diffuser (6) metal cover (6) and two end caps (8) to the channel (1) using four finials (9) to secure it.

Step 6 – Restore power at the fuse or circuit breaker box

Step 7 – Operation (Figure 2)

A. The right pull switch operates the uplight and downlight by pulling on the chain once to turn on the uplight, pull twice to turn on the downlight, third pull to turn on both uplight and downlight, and fourth pull to turn both lights off.
B. The left pull switch operates the night light by single pull to turn night light on and pull twice to turn off.

Mounting hole (backside of fixture)

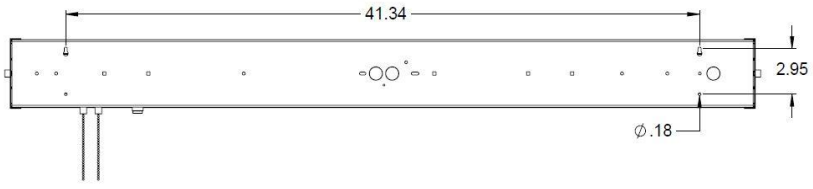

Limited Factory Warranty
AFX Inc. hereby warrants that this fixture is free from defects in materials and workmanship when installed and used under normal operating conditions for a period of 5 years from date of purchase. This warranty covers all component parts and extends only to replacement of defective fixture or components; it does not cover failure due to improper installation, misuse, mishandling or damage incurred in transit.

8061925 R0

2345 N. Ernie Krueger Circle Waukegan, IL 60087